Model Name: P270HVN02.0

Issue Date : 2021/08/11

( )Preliminary Specifications
(∗) Final Specifications

Customer Signature	Date	AUO Display Plus	Date
Approved By		Approval by PM Director CT Wu	
Note		Reviewed by RD Director Lamy Chen	
		Reviewed by Project Leader Wallace Ting	
		Prepared by PM Sophie Teng	

Content

Records of Revision

Version	Date	Page	Old description	New Description	Remark
0.0	2021/1/15			New Spec Format	
1.0	2021/2/3			New Spec Format	
1.1	2021/2/9	28		Add 6.2 Cartoon label	
1.2	2021/2/26	5~33		Correct head of page from “Open cell Product ” to “Product”	
1.3	2021/8/11	23		Update LED connector type 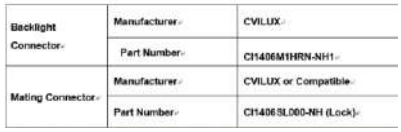	
		28 29 30	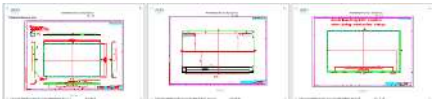	Update module drawing which add ADP logo 	

1 Handling Precautions

1) Since polarizer is easily damaged, do not touch or press the surface of polorizer with hand.
2) Be sure to turn off power supply when inserting or disconnecting from input connector.
3) Wipe off water drop immediately. Long contact with water may cause discoloration or spots.
4) When the panel surface is soiled, wipe it with absorbent cotton or other soft cloth.
5) Since the panel is made of glass, it may break or crack if dropped or bumped on hard surface.
6) Since CMOS LSI is used in this module, take care of static electricity and insure human earth when handling.
7) Do not open or modify the Module Assembly.
8) Do not press the reflector sheet at the back of the module to any directions.
9) In case a TFT-LCD Module has to be put back into the packing container slot after once it was taken out from the container, do not press the center of the LED lightbar edge. Otherwise the TFT-LCD Module may be damaged.
10) Insert or pull out the interface connector, be sure not to rotate nor tilt it of the TFT-LCD Module.
11) Do not twist nor bend the TFT -LCD Module even momentary. It should be taken into consideration that no bending/twisting forces are applied to the TFT-LCD Module from outside. Otherwise the TFT-LCD Module may be damaged.
12) Please avoid touching COF position while you are doing mechanical design.
13) When storing modules as spares for a long time, the following precaution is necessary: Store them in a dark place. Do not expose the module to sunlight or fluorescent light. Keep the temperature between 5℃ and 35℃ at normal humidity.
14) Do not apply the same pattern for a long time, it will enhance relevant defect.

2 General Description

This specification applies to the 27 inch-FHD color a-Si TFT-LCD Module P270HVN02.0 The display supports the FHD - 1920(H) x 1080(V) screen format and 16.7M colors (RGB 8-bit data input). The light source of this TFT-LCD module is W-LED. All input signals are 2-channel LVDS interface and this module doesn't contain a driver for backlight.

2.1 Display Characteristics

The following items are characteristics summary on the table under 25°C condition:

Items	Unit	Specification
Screen Diagonal	[mm]	685.65(27.0")
Active Area	[mm]	597.6 (H) x 336.15 (V)
Pixels H x V	-	1920(x3) x 1080
Pixel Pitch	[um]	311.25 (per one triad) ×311.25
Pixel Arrangement	-	R.G.B. Vertical island
Display Mode	-	VA Mode, Normally Black
White Luminance (Center)	[cd/m^2]	300 cd/m^2 (Typ.) at 80mA, 350 cd/m^2 (Typ.) at 100mA
Contrast Ratio	-	3000 (Typ.)
Optical Response Time	[msec]	12ms (Typ., on/off)
Nominal Input Voltage VDD	[Volt]	5 V (Typ)
Power Consumption (VDD line + LED line)	[Watt]	19.53 watt VDD line : PDD (typ), All white pattern at 60Hz = 4.65 W LED line : PBLU (typ) = 14.88 W(@80mA)
Weight	[Grams]	2180
Physical Size	[mm]	613.6(H)x356.85(V)x10.0(D) Typ.
Electrical Interface	-	Dual channel LVDS
Support Color	-	16.7M colors (RGB 8-bit)
Surface Treatment	-	Anti-Glare 3H
Temperature Range Operating Storage (Shipping)	 [°C] [°C]	 0 to +50 -20 to +60
RoHS Compliance		RoHS Compliance
TCO Compliance		TCO 7.0 Compliance

2.2 Absolute Ratings of Environment

Permanent damage may occur if exceeding the following maximum rating.

Symbol	Description	Min.	Max.	Unit	Remark
TOP	Operating Temperature	0	+50	[ºC]	***Note 2-1***
TGS	Glass surface temperature (operation)	0	+65	[ºC]	***Note 2-1*** *Function judged only*
HOP	Operation Humidity	5	90	[%RH]	***Note 2-1***
TST	Storage Temperature	-20	+60	[ºC]	
HST	Storage Humidity	5	90	[%RH]	

Note 2-1: Temperature and relative humidity range are shown as the below figure.

1. 90% RH Max (Ta ≦39℃)
2. Max wet-bulb temperature at 39℃ or less. (Ta ≦39℃)
3. No condensation

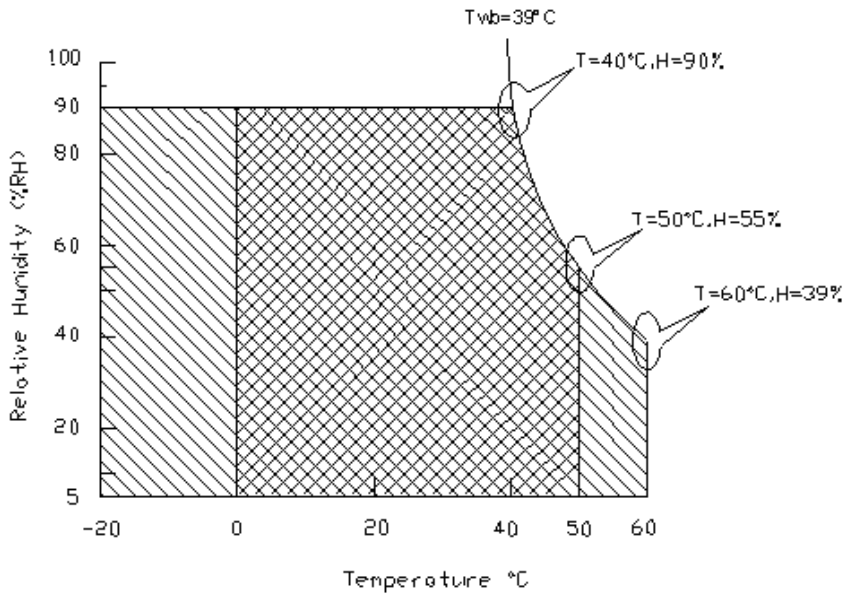

Operating Range 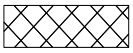 Storage Range 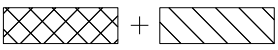

2.3 Optical Characteristics

The optical characteristics are measured on the following test condition.

Test Condition:

1. Equipment setup: Please refer to ***Note 2-2***.
2. Panel Lighting time: 30 minutes
3. VDD=5V, Fv=60Hz,Is=80mA,Ta=25℃

Symbol	Description		Min.	Typ.	Max.	Unit	Remark
L_w	White Luminance (Center of screen)		240	300	-	[cd/m2]	***Note 2-2*** *By SR-3*
L_{uni}	Luminance Uniformity (9 points)		75	80	-	[%]	***Note 2-3*** *By SR-3*
CR	Contrast Ratio (Center of screen)		1800	3000	-	-	***Note 2-4*** *By SR-3*
θ_R	Horizontal Viewing Angle (CR=10)	Right	75	89	-	[degree]	***Note 2-5*** *By SR-3*
θ_L		Left	75	89	-		
Φ_H	Vertical Viewing Angle (CR=10)	Up	75	89	-		
Φ_L		Down	75	89	-		
T_{rR}	Response Time	Raising Time	-	7	17	[msec]	***Note 2-6*** *By TRD-100*
T_{rF}		Falling Time		5	7		
$T_{rR}+T_{rF}$		Raising + Falling		12	24		
R_x	Color Coordinates (CIE 1931)	Red x	0.610	0.640	0.670	-	*By SR-3*
R_y		Red y	0.303	0.333	0.363		
G_x		Green x	0.290	0.320	0.350		
G_y		Green y	0.590	0.620	0.650		
B_x		Blue x	0.126	0.156	0.186		
B_y		Blue y	0.025	0.055	0.085		
W_x		White x	0.283	0.313	0.343		
W_y		White y	0.299	0.329	0.359		
CT	Crosstalk		-	-	1.5	[%]	***Note 2-7*** *By SR-3*
F_{dB}	Flicker (Center of screen)		-	-	-20	[dB]	***Note 2-8*** *By SR-3*

Note 2-2: Equipment setup :

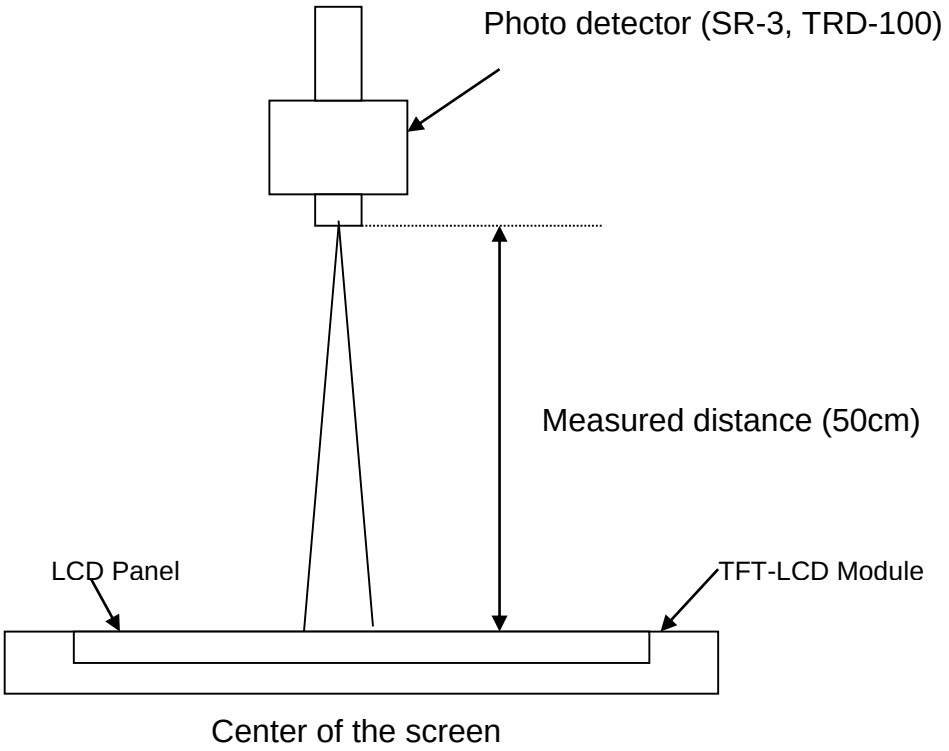

Note 2-3: Luminance Uniformity Measurement

Definition:

$$\text{Luminance Uniformit y} = \frac{\text{Minimum Luminance of 9 Points (P1 ~ P9)}}{\text{Maximum Luminance of 9 Points (P1 ~ P9)}}$$

a.Test pattern: White Pattern

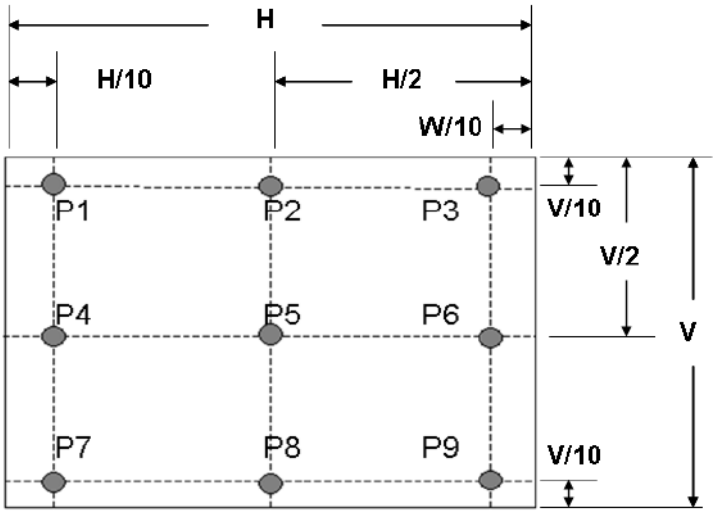

Note 2-4: Contrast Ratio Measurement

Definition:

$$\text{Contrast Ratio} = \frac{\text{Luminance of White pattern}}{\text{Luminance of Black pattern}}$$

a. Measured position: Center of screen (P5) & perpendicular to the screen (θ=Φ=0°)

Note 2-5: Viewing angle measurement

Definition: The angle at which the contrast ratio is greater than 10 & 5 .

a. Horizontal view angle: Divide to left & right (θ_L & θ_R)
Vertical view angle: Divide to up & down (Φ_H &Φ_L)

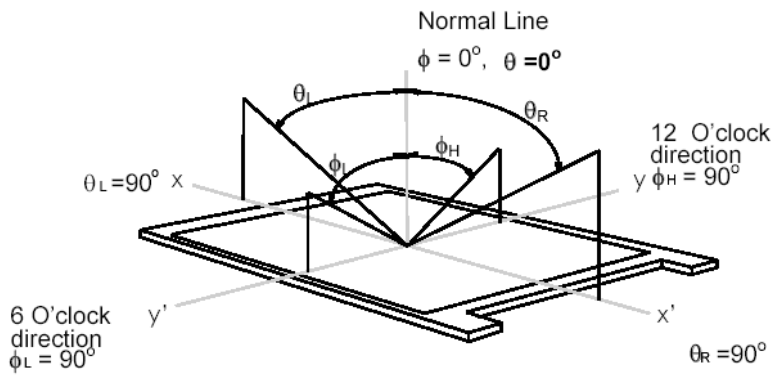

Note 2-6: Response time measurement

The output signals of photo detector are measured when the input signals are changed from "Full Black" to "Full White" (rising time, T_{rR}), and from "Full White" to "Full Black" (falling time, T_{rF}), respectively. The response time is interval between the 10% and 90% (1 frame at 60 Hz) of amplitudes.

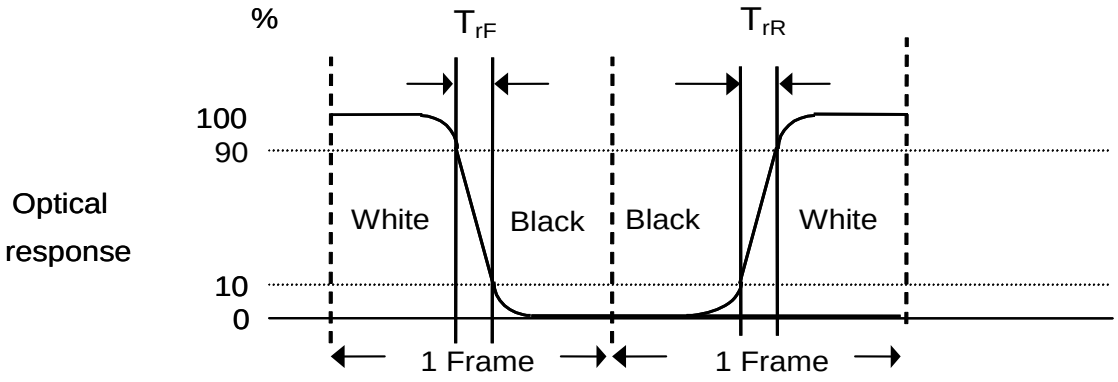

T_{rR} + T_{rF} = 12 msec (typ.).

Note 2-7: Crosstalk measurement

Definition:

CT = Max. (CT_H,CT_V);

Where

a.Maximum Horizontal Crosstalk :

CT_H = Max. (| Y_{BL} – Y_{AL} | / Y_{AL} × 100 %, | Y_{BR} – Y_{AR} | / Y_{AR} × 100 %);

Maximum Vertical Crosstalk:

CT_V = Max. (| Y_{BU} – Y_{AU} | / Y_{AU} × 100 %, | Y_{BD} – Y_{AD} | / Y_{AD} × 100 %);

b. Y_{AU}, Y_{AD}, Y_{AL}, Y_{AR} = Luminance of measured location without Black pattern

Y_{BU}, Y_{BD}, Y_{BL}, Y_{BR} = Luminance of measured location with Black pattern

Note 2-8: Flicker measurement

a. Test pattern: It is listed as following.

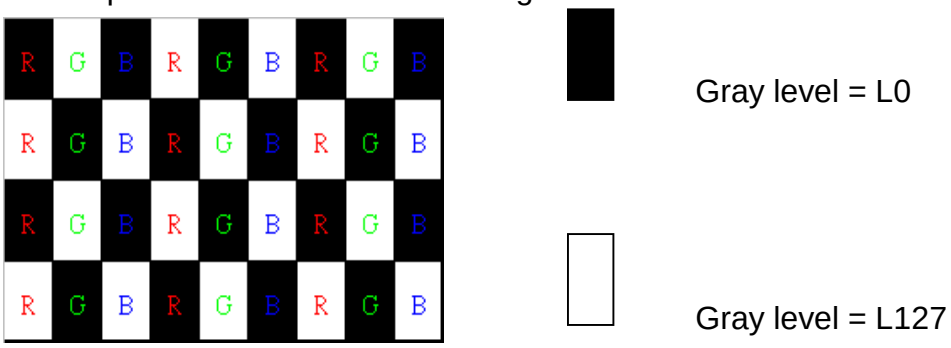

R: Red, G: Green, B:Blue

b. Measured position: Center of screen (P5) & perpendicular to the screen (θ=Φ=0°)

2.4 Mechanical Characteristics

Symbol	Description	Min.	Max.	Unit	Remark
P_{bc}	Backside Compression	2.5	-	[Kgf]	***Note 2-9***

Note 2-9: Test Method:

The point is at a distance from right-downside 25mm x 25mm defined as the Start Point of Measure Points, and the point is at a distance 25mm from left-side & around 10mm from PCB defined as the End Point.

Align 50mm x 50mm block from Start Point on the Bezel Back, and the corners of each block are Measure Points.

If the distance from the last block to each side of the End Point ≧ 25mm, add other blocks to make sure that most area of Bezel Back can be measured.

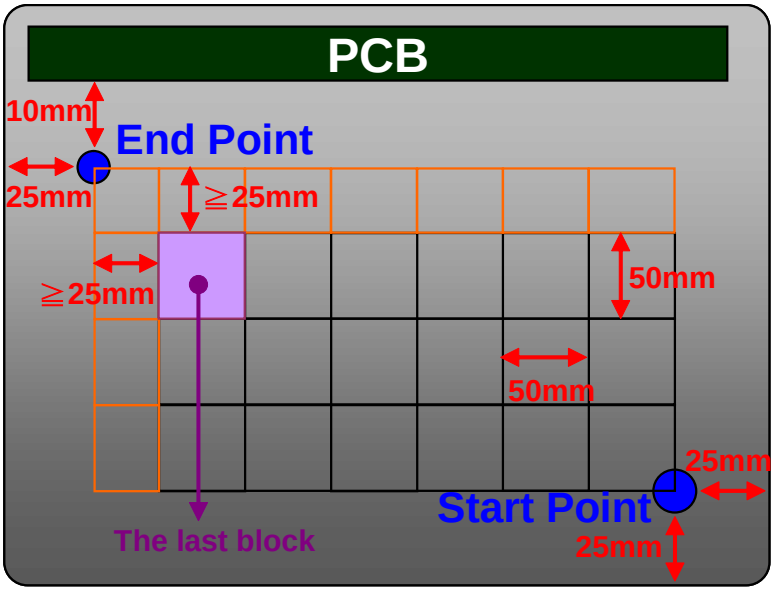

3 TFT-LCD Module

3.1 Block Diagram

The following shows the block diagram of the 27 inch Color TFT-LCD Module.

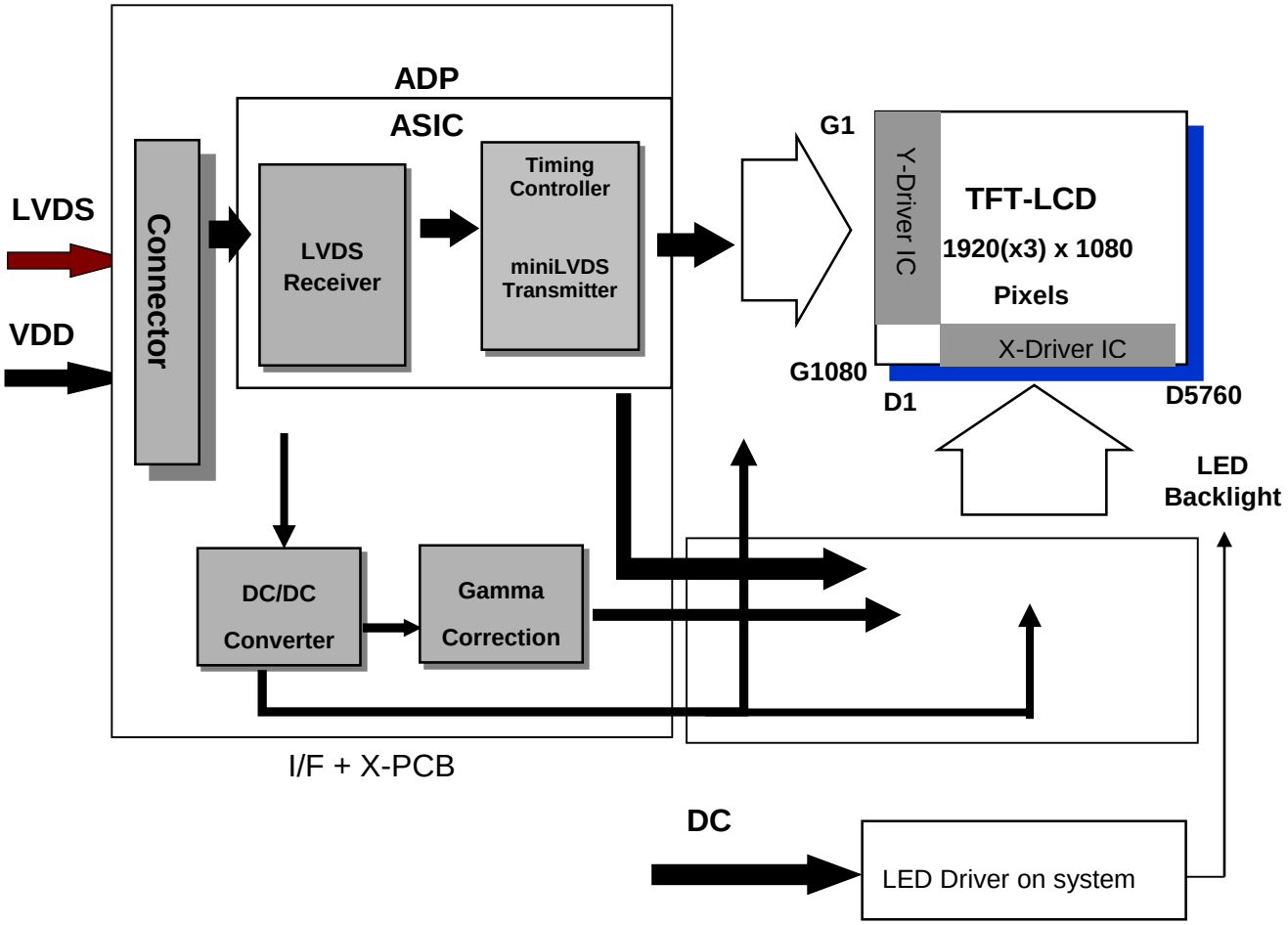

3.2 Interface Connection

3.2.1 Connector Type

TFT-LCD Connector	Manufacturer	P-TWO	STM	STARCONN
	Part Number	AL230F-A0G1D-P	MSCKT2407P30HB	093G30-02001A-M4
Mating Connector	Manufacturer	JAE or Compatible		
	Part Number	FI-X30HL (Locked Type)		

3.2.2 Connector Pin Assignment

PIN #	SIGNAL NAME	DESCRIPTION
1	RXO0-	Negative LVDS differential data input (Odd data)
2	RXO0+	Positive LVDS differential data input (Odd data)
3	RXO1-	Negative LVDS differential data input (Odd data)
4	RXO1+	Positive LVDS differential data input (Odd data)
5	RXO2-	Negative LVDS differential data input (Odd data, H-Sync,V-Sync,DSPTMG)
6	RXO2+	Positive LVDS differential data input (Odd data, H-Sync,V-Sync,DSPTMG)
7	GND	Power Ground
8	RXOCLK-	Negative LVDS differential clock input (Odd clock)
9	RXOCLK+	Positive LVDS differential clock input (Odd clock)
10	RXO3-	Negative LVDS differential data input (Odd data)
11	RXO3+	Positive LVDS differential data input (Odd data)
12	RXE0-	Negative LVDS differential data input (Even data)
13	RXE0+	Positive LVDS differential data input (Even data)
14	GND	Power Ground
15	RXE1-	Negative LVDS differential data input (Even data)
16	RXE1+	Positive LVDS differential data input (Even data)
17	GND	Power Ground
18	RXE2-	Negative LVDS differential data input (Even data)
19	RXE2+	Positive LVDS differential data input (Even data)
20	RXECLK-	Negative LVDS differential clock input (Even clock)
21	RXECLK+	Positive LVDS differential clock input (Even clock)
22	RXE3-	Negative LVDS differential data input (Even data)
23	RXE3+	Positive LVDS differential data input (Even data)
24	GND	Power Ground
25	NC	No contact
26	NC	No contact
27	NC	No contact

28	VDD	+5.0V Power Supply
29	VDD	+5.0V Power Supply
30	VDD	+5.0V Power Supply

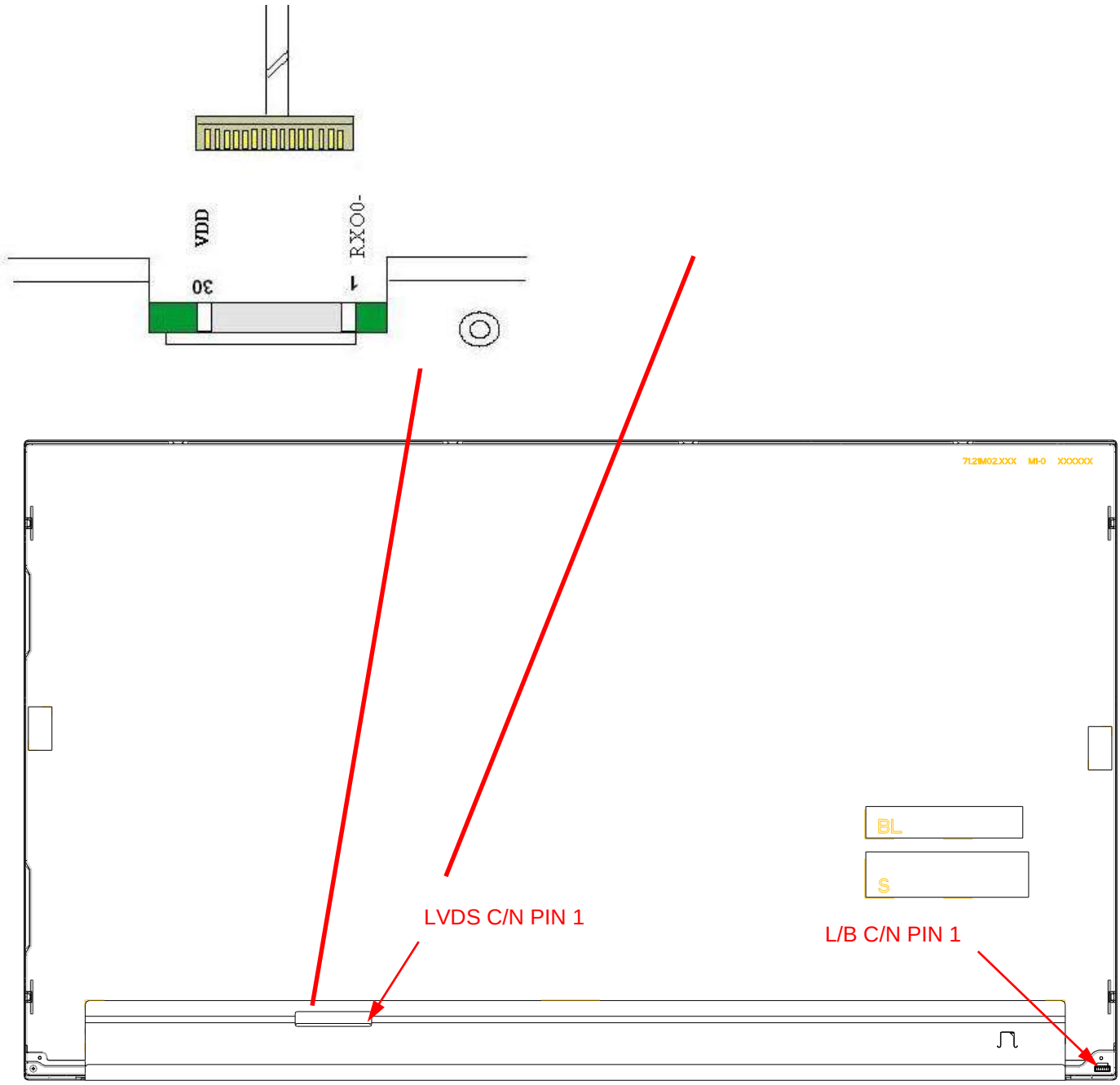

3.3 Electrical Characteristics

3.3.1 Absolute Maximum Rating

Permanent damage may occur if exceeding the following maximum rating.

Symbol	Description	Min	Max	Unit	Remark
VDD	Power Supply Input Voltage	GND-0.3	6.0	[Volt]	Ta=25℃

3.3.2 Recommended Operating Condition

Symbol	Description	Min	Typ	Max	Unit	Remark
VDD	Power supply Input voltage	4.5	5.0	5.5	[Volt]	
IDD	Power supply Input Current (RMS)	-	0.93	1.22	[A]	VDD= 5.0V, All white Pattern at 60 Hz
			1.22	1.46	[A]	VDD= 5.0V, All white Pattern at 75 Hz
PDD	VDD Power Consumption	-	4.65	5.58	[Watt]	VDD= 5.0V, All white Pattern at 60 Hz
			6.10	7.30	[Watt]	VDD= 5.0V, All white Pattern at 75 Hz
IRush	Inrush Current	-	-	3.0	[A]	***Note 3-1***
VDDrp	Allowable VDD Ripple Voltage	-	-	500	[mV]	VDD= 5.0V, All white Pattern at 75 Hz

Note 3-1: Inrush Current measurement:

Test circuit:

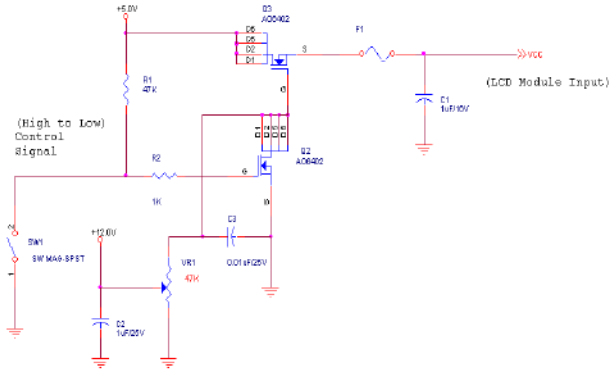

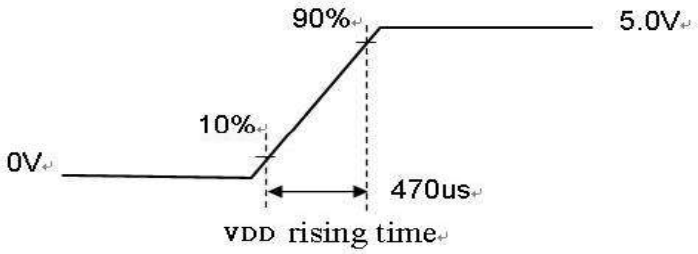

The duration of VDD rising time: 470us.

3.4 Signal Characteristics

3.4.1 LCD Pixel Format

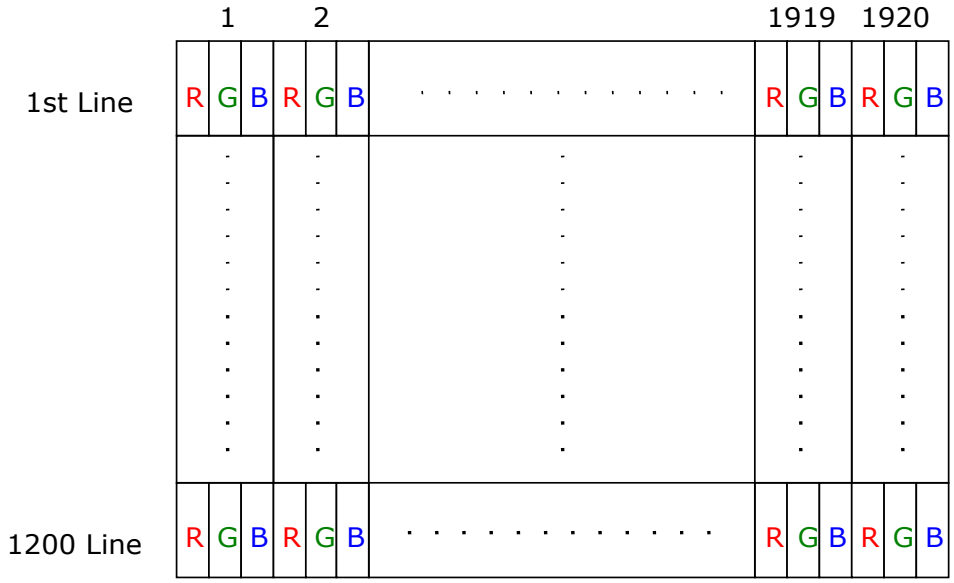

3.4.2 LVDS Data Format

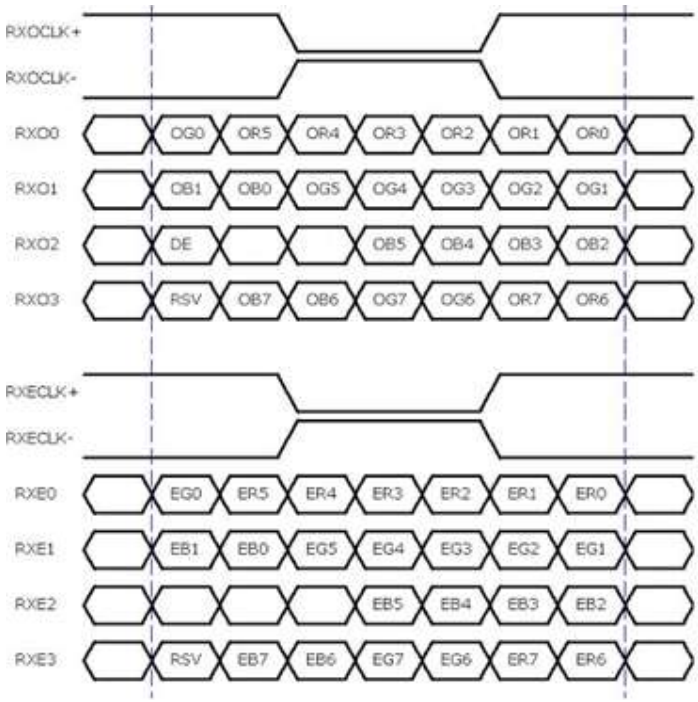

8 Bit Color Bit Order			
MSB	R7	G7	B7
	R6	G6	B6
	R5	G5	B5
	R4	G4	B4
	R3	G3	B3
	R2	G2	B2
	R1	G1	B1
LSB	R0	G0	B0

Note 3-2:

a. O = “Odd Pixel Data” E = “Even Pixel Data”

b. Refer to 3.4.1 LCD pixel format, the 1st data is 1 (Odd Pixel Data), the 2nd data is 2 (Even Pixel Data) and the last data is 1920 (Even Pixel Data).

3.4.3 Color versus Input Data

The following table is for color versus input data (8bit). The higher the gray level, the brighter the color.

Color	Gray Level	Color Input Data																								Remark
		RED data (MSB:R7, LSB:R0)								GREEN data (MSB:G7, LSB:G0)								BLUE data (MSB:B7, LSB:B0)								
		R7	R6	R5	R4	R3	R2	R1	R0	G7	G6	G5	G4	G3	G2	G1	G0	B7	B6	B5	B4	B3	B2	B1	B0	
Black	-	0	0	0	0	0	0	0	0	0	0	0	0	0	0	0	0	0	0	0	0	0	0	0	0	
White	-	1	1	1	1	1	1	1	1	1	1	1	1	1	1	1	1	1	1	1	1	1	1	1	1	
Gray 127	-	0	1	1	1	1	1	1	1	0	1	1	1	1	1	1	1	0	1	1	1	1	1	1	1	
Red	L0	0	0	0	0	0	0	0	0	0	0	0	0	0	0	0	0	0	0	0	0	0	0	0	0	Black
	:	:	:	:	:	:	:	:	:	:	:	:	:	:	:	:	:	:	:	:	:	:	:	:	:	
	L255	1	1	1	1	1	1	1	1	0	0	0	0	0	0	0	0	0	0	0	0	0	0	0	0	
Green	L0	0	0	0	0	0	0	0	0	0	0	0	0	0	0	0	0	0	0	0	0	0	0	0	0	Black
	:	:	:	:	:	:	:	:	:	:	:	:	:	:	:	:	:	:	:	:	:	:	:	:	:	
	L255	0	0	0	0	0	0	0	0	1	1	1	1	1	1	1	1	0	0	0	0	0	0	0	0	
Blue	L0	0	0	0	0	0	0	0	0	0	0	0	0	0	0	0	0	0	0	0	0	0	0	0	0	Black
	:	:	:	:	:	:	:	:	:	:	:	:	:	:	:	:	:	:	:	:	:	:	:	:	:	
	L255	0	0	0	0	0	0	0	0	0	0	0	0	0	0	0	0	1	1	1	1	1	1	1	1	

3.4.4 LVDS Specification

a. DC Characteristics:

Symbol	Description	Min	Typ	Max	Units	Condition
V_{TH}	LVDS Differential Input High Threshold	-	-	+100	[mV]	V_{CM} = 1.2V
V_{TL}	LVDS Differential Input Low Threshold	-100	-	-	[mV]	V_{CM} = 1.2V
$\lvert V_{ID} \rvert$	LVDS Differential Input Voltage	100	-	600	[mV]	
V_{CM}	LVDS Common Mode Voltage	+1.0	+1.2	+1.5	[V]	V_{TH}-V_{TL} = 200mV

LVDS Signal Waveform:

Use RxOCLK- & RxOCLK+ as example.

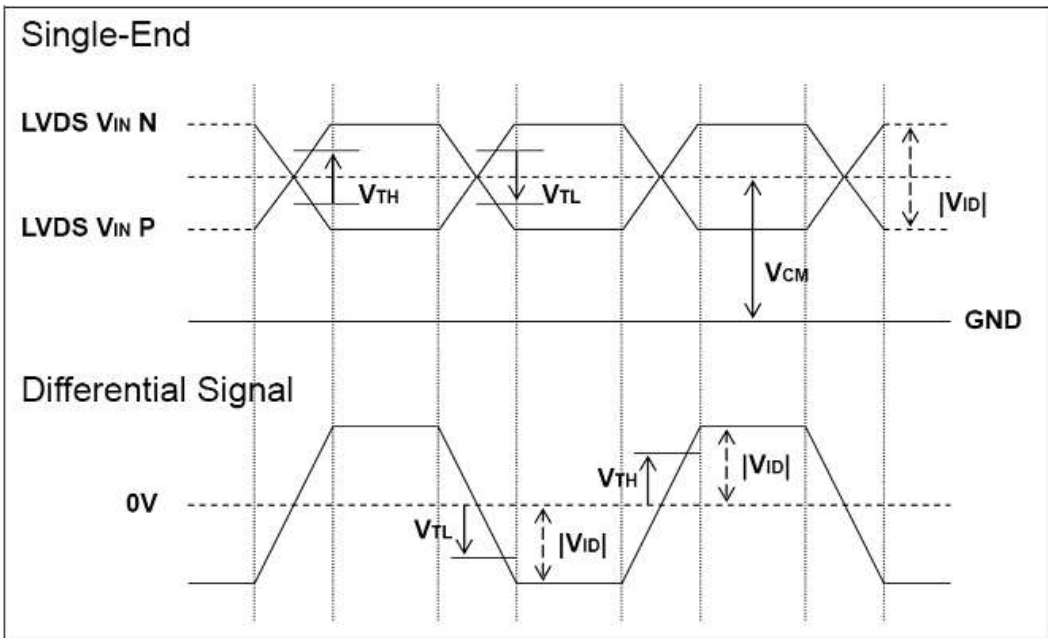

b. AC Characteristics:

Symbol	Description	Min	Max	Unit	Remark
F_{DEV}	Maximum deviation of input clock frequency during Spread Spectrum	-	± 3	%	
F_{MOD}	Maximum modulation frequency of input clock during Spread Spectrum	-	200	KHz	

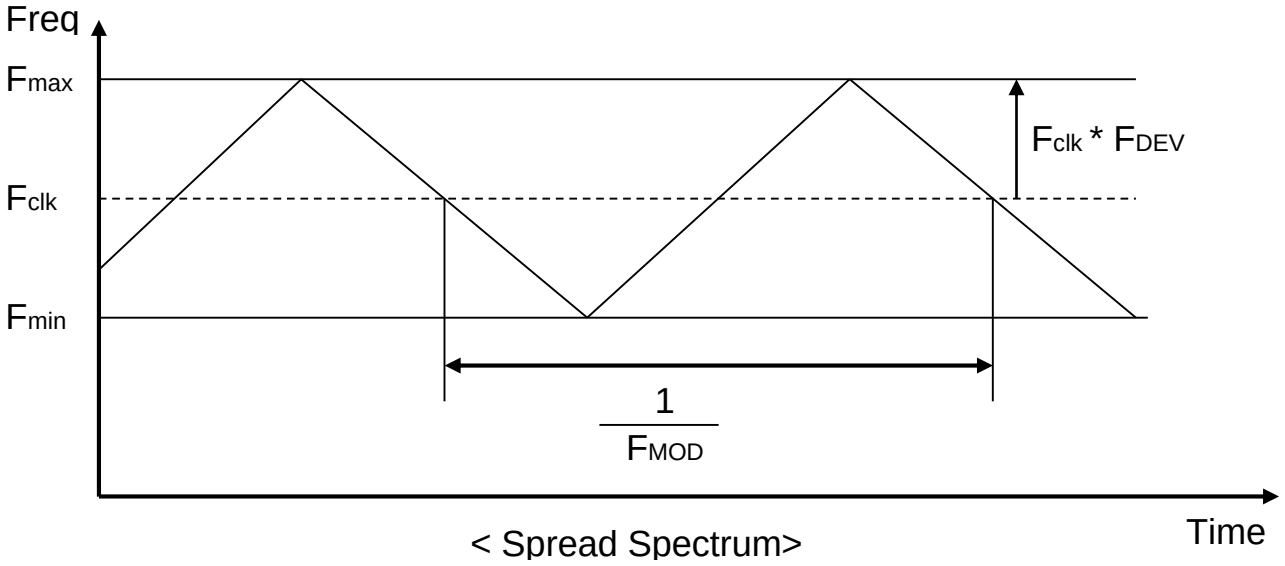

Fclk: LVDS Clock Frequency

3.4.5 Input Timing Specification

It only support DE mode, and the input timing are shown as the following table.

Symbol	Description		Min.	Typ.	Max.	Unit	Remark
Tv	Vertical Section	Period	1092	1130	1793	Th	
Tdisp (v)		Active	1080	1080	1080	Th	
Tblk (v)		Blanking	12	50	713	Th	
Fv		Frequency	50	60	76	Hz	
Th	Horizontal Section	Period	1004	1050	1100	Tclk	
Tdisp (h)		Active	960	960	960	Tclk	
Tblk (h)		Blanking	44	90	140	Tclk	
Fh		Frequency	55	68	90	KHz	***Note 3-3***
Tclk	LVDS Clock	Period	11.1	14.0	18.2	ns	1/Fclk
Fclk		Frequency	54.8	71.2	90.0	MHz	***Note 3-4***

Note 3-3: The equation is listed as following. Please don't exceed the above recommended value.

Fh (Min.) = Fclk (Min.) / Th (Min.);
Fh (Typ.) = Fclk (Typ.) / Th (Typ.);
Fh (Max.)= Fclk (Max.) / Th (Min.);

Note 3-4: The equation is listed as following. Please don't exceed the above recommended value.

Fclk (Min.) = Fv (Min.) x Th (Min.) x Tv (Min.);

Fclk (Typ.) = Fv (Typ.) x Th (Typ.) x Tv (Typ.);

Fclk (Max.) = Fv (Max.) x Th (Typ.) x Tv (Typ.);

3.4.6 Input Timing Diagram

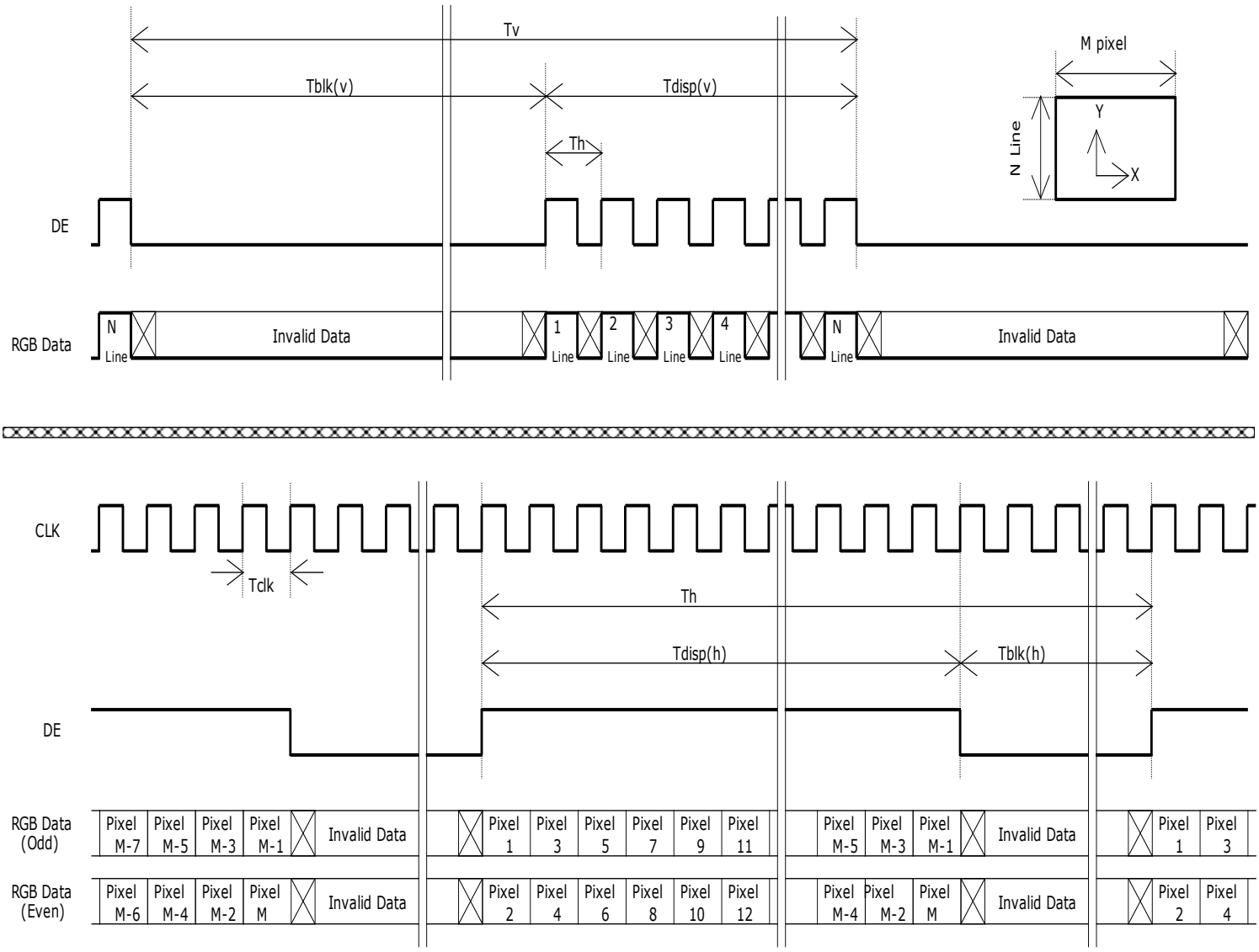

3.5 Power ON/OFF Sequence

VDD power,LVDS signal and backlight on/off sequence are as following. LVDS signals from any system shall be Hi-Z state when VDD is off.

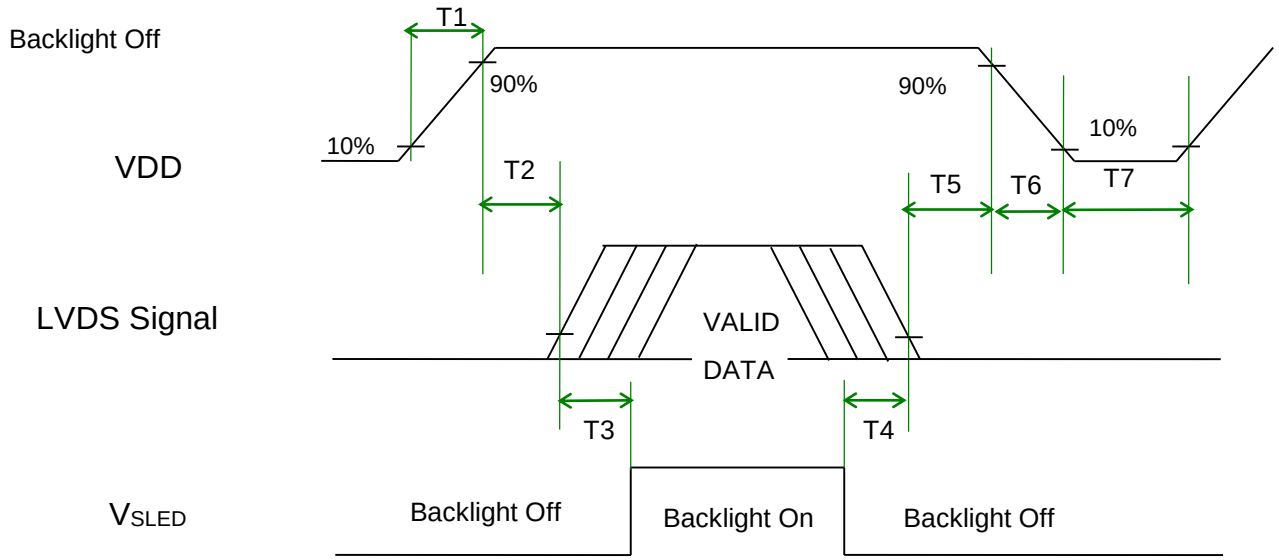

Power Sequence Timing

Symbol	Value			Unit	Remark
	Min.	Typ.	Max.		
T1	0.5	-	10	[ms]	
T2	0	-	50	[ms]	
T3	500	-	-	[ms]	
T4	100	-	-	[ms]	
T5	0		50	[ms]	***Note 3-5*** ***Note 3-6***
T6	0	-	200	[ms]	***Note 3-6*** ***Note 3-7***
T7	1000	-	-	[ms]	

Note 3-5 : Recommend setting T5 = 0ms to avoid electronic noise when VDD is off.
Note 3-6 : During T5 and T6 period , please keep the level of input LVDS signals with Hi-Z state.
Note 3-7 : Voltage of VDD must decay smoothly after power-off. (customer system decide this value)

4 Backlight Unit

4.1 Block Diagram

The following shows the block diagram of the 27 inch Backlight Unit. And it includes 60pcs LED in the LED light bar. (4 strings and 15 pcs LED of one string).

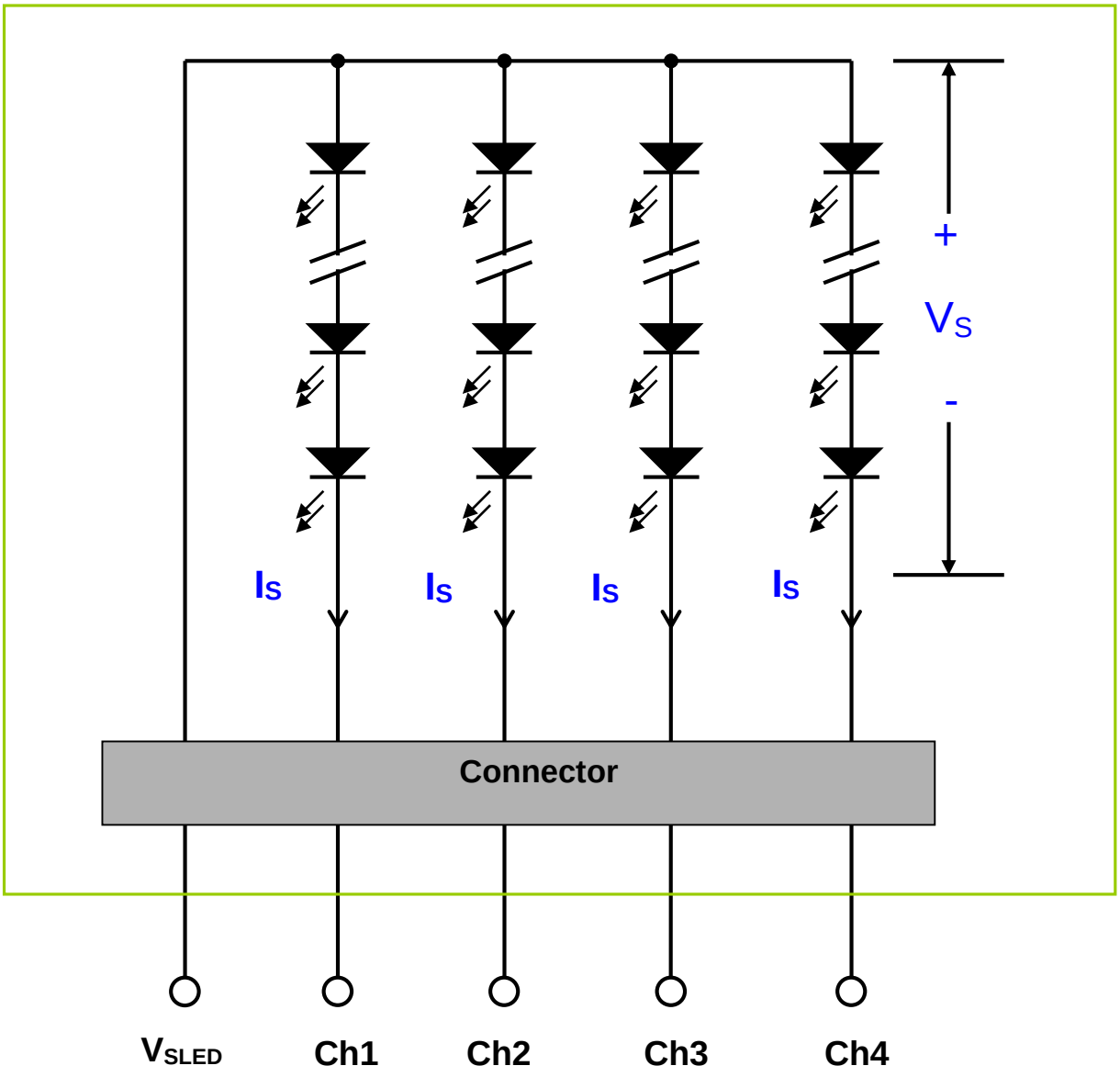

4.2 Interface Connection

4.2.1 Connector Type

Backlight Connector	Manufacturer	CVILUX
	Part Number	CI1406M1HRN-NH1
Mating Connector	Manufacturer	CVILUX or Compatible
	Part Number	CI1406SL000-NH (Lock)

4.2.2 Connector Pin Assignment

Pin#	Symbol	Description	Remark
1	Ch1	LED Current Feedback Terminal (Channel 1)	
2	Ch2	LED Current Feedback Terminal (Channel 2)	
3	V_{SLED}	LED Power Supply Voltage Input Terminal	
4	V_{SLED}	LED Power Supply Voltage Input Terminal	
5	Ch3	LED Current Feedback Terminal (Channel 3)	
6	Ch4	LED Current Feedback Terminal (Channel 4)	

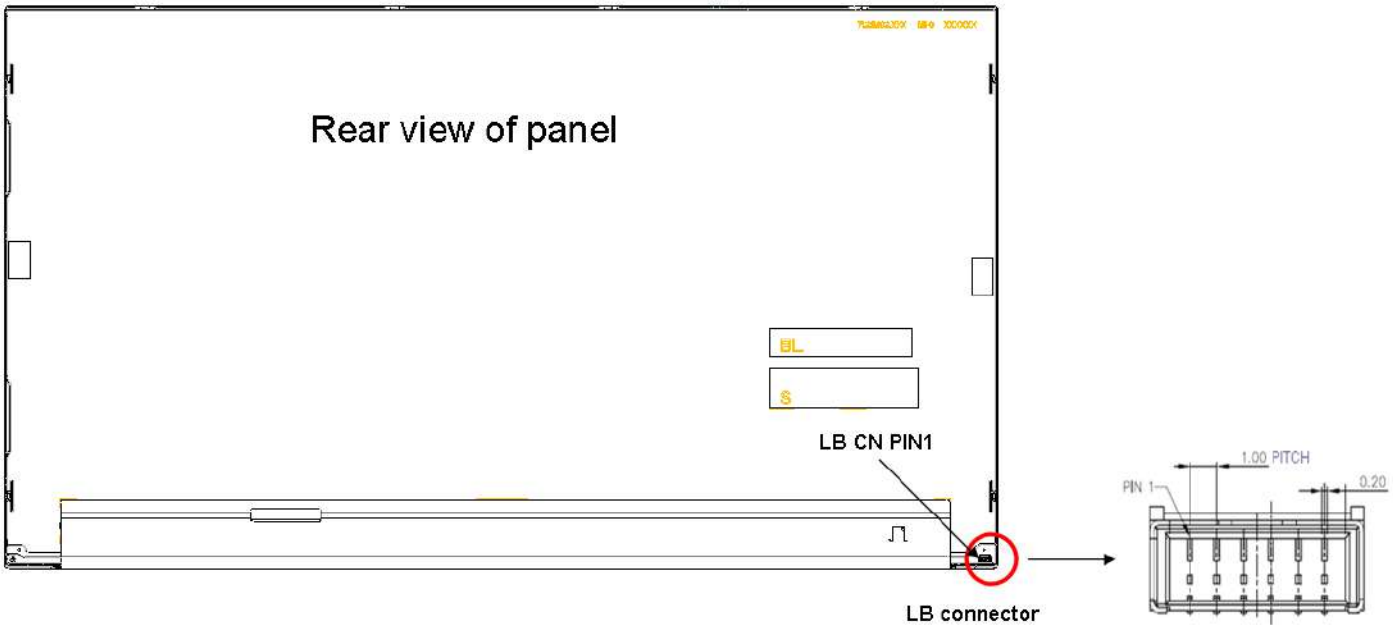

4.3 Electrical Characteristics

4.3.1 Absolute Maximum Rating

Permanent damage may occur if exceeding the following maximum rating.

(Ta=25℃)

Symbol	Description	Min	Max	Unit	Remark
Is	LED String Current	0	150	[mA]	100% duty ratio
			300	[mA]	*Duty ratio≦ 10%* *Pulse time=10 ms*

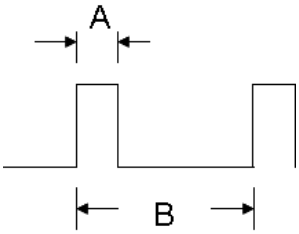

Duty ratio= (A / B) X 100% ; (A: Pulse time, B: Period)

4.3.2 Recommended Operating Condition

(Ta=25℃)

Symbol	Description	Min.	Typ.	Max.	Unit	Remark
Is	LED String Current	-	80	84	[mA]	100% duty ratio of LED chip ***Note 4-7***
Vs	LED String Voltage	42	46.5	51	[Volt]	Is=80mA @ 100% duty ratio; ***Note 4-1, Note 4-5***
ΔVs	Maximum Vs Voltage Deviation of light bar	-	-	3	[Volt]	Is=80mA @ 100% duty ratio; ***Note 4-2***
P_{BLU}	LED Light Bar Power Consumption	-	14.88	16.32	[Watt]	***Note 4-3***
LT_{LED}	LED Life Time	40,000	-	-	[Hour]	***Note 4-4***
OVP	Over Voltage Protection in system board	110% Vsmax	-	-	[Volt]	***Note 4-5***

Note 4-1: Vs (Typ.) = V_F (Typ.) X LED No. (one string);

a. V_F: LED chip forward voltage, V_F (Min.)=2.8V, V_F(Typ.)=3.1V, V_F(Max.)=3.4V

b. The same euqation to calculate Vs(Min.) & Vs (Max.) for respective V_F (Min.) & V_F(Max.);

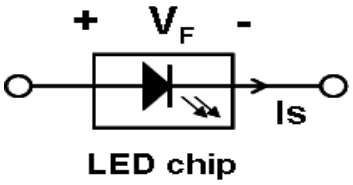

Note 4-2: ΔVs (Max.) = ΔV_F X LED No. (one string);

a. ΔV_F: LED chip forward voltage deviation; (0.2 V , each Bin of LED V_F)

Note 4-3: P_{BLU} (Typ.) = Vs (Typ.) X Is (Typ.) X 4 ; (4 is total String No. of LED Light bar)

P_{BLU} (Max.) = Vs (Max.) X Is (Typ.) X 4 ;

Note 4-4: Definition of life time:

a. Brightness of LED becomes to 50% of its original value

b. Test condition: Is = 80mA and 25℃ (Room Temperature)

Note 4-5: Recommendation for LED driver power design:

Due to there are electrical property deviation in LED & monitor set system component after long time operation. ADP strongly recommend the design value of LED driver board OVP (over voltage protection) should be 10% higher than max. value of LED string voltage (Vs) at least.

Note 4-6: ADP strongly recommend “Analog Dimming” method for backlight brightness control for Wavy Noise Free. Otherwise, recommend that Dimming Control Signal (PWM Signal) should be synchronized with Frame Frequency.

Note 4-7 Ensure that the LED light bar is not subjected either forward or reverse voltage while monitor set is on standby mode or not in use.

5 Reliability Test

ADP reliability test items are listed as following table. (*Bare Panel only*)

Items	Condition	Remark
Temperature Humidity Bias (THB)	Ta= 50℃, 80%RH, 300hours	
High Temperature Operation (HTO)	Ta= 50℃, 50%RH, 300hours	
Low Temperature Operation (LTO)	Ta= 0℃, 300hours	
High Temperature Storage (HTS)	Ta= 60℃, 300hours	
Low Temperature Storage (LTS)	Ta= -20℃, 300hours	
Vibration Test (Non-operation)	Acceleration: 1.5 Grms Wave: Random Frequency: 10 - 200 Hz Sweep: 30 Minutes each Axis (X, Y, Z)	
Shock Test (Non-operation)	Acceleration: 50 G Wave: Half-sine Active Time: 20 ms Direction: ±X, ±Y, ±Z (one time for each Axis)	
Thermal Shock Test (TST)	-20℃/30min, 60℃/30min, 100 cycles	***Note 5-1***
On/Off Test	On/10sec, Off/10sec, 30,000 cycles	
ESD (Electro Static Discharge)	Contact Discharge: ± 15KV, 150pF(330Ω) 1sec, 8 points, 25 times/ point.	***Note 5-2***
	Air Discharge: ± 15KV, 150pF(330Ω) 1sec 8 points, 25 times/ point.	
Altitude Test	Operation:18,000 ft Non-Operation:40,000 ft	

Note 5-1: a. A cycle of rapid temperature change consists of varying the temperature from -20℃ to 60℃, and back again. Power is not applied during the test.

b. After finish temperature cycling, the unit is placed in normal room ambient for at least 4 hours before power on.

Note 5-2: EN61000-4-2, ESD class B: Certain performance degradation allowed
No data lost
Self-recoverable
No hardware failures.

6 Shipping Label

6.1 Shipping Label

The label on the panel is shown as below:

Note 6-1: For Pb Free products, ADP will add for identification.

Note 6-2: For RoHS compatible products, ADP will add for identification.

Note 6-3: For China RoHS compatible products, ADP will add for identification.

Note 6-4: The Green Mark will be presented only when the green documents have been ready by ADP Internal Green Team.

6.2 Cartoon Label

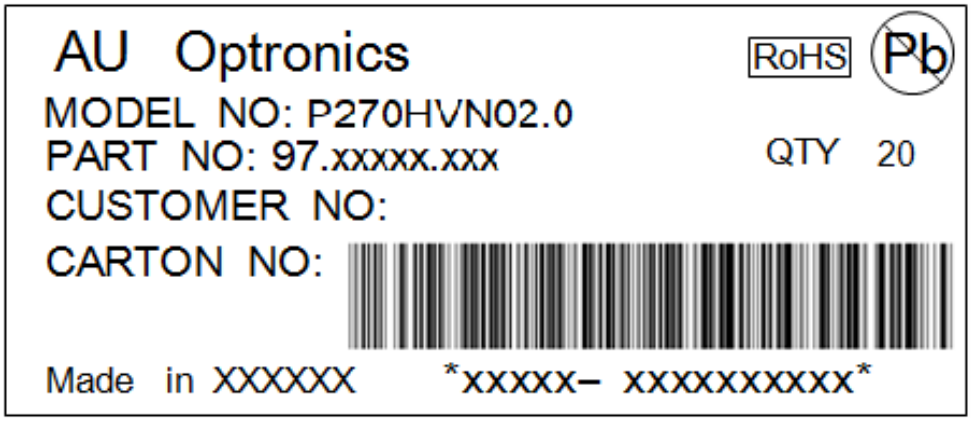

7 Mechanical Characteristics

Front View

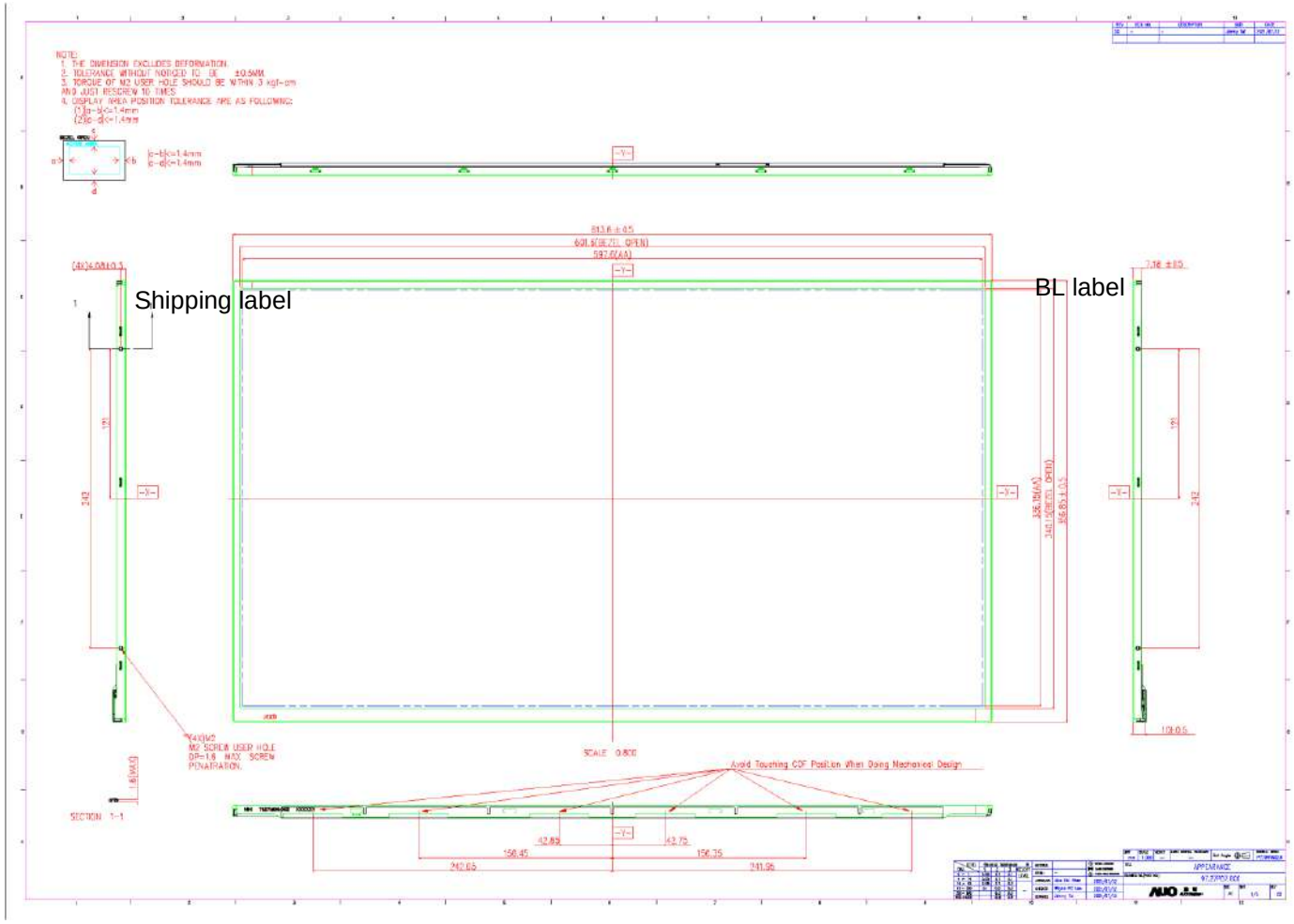

Back View

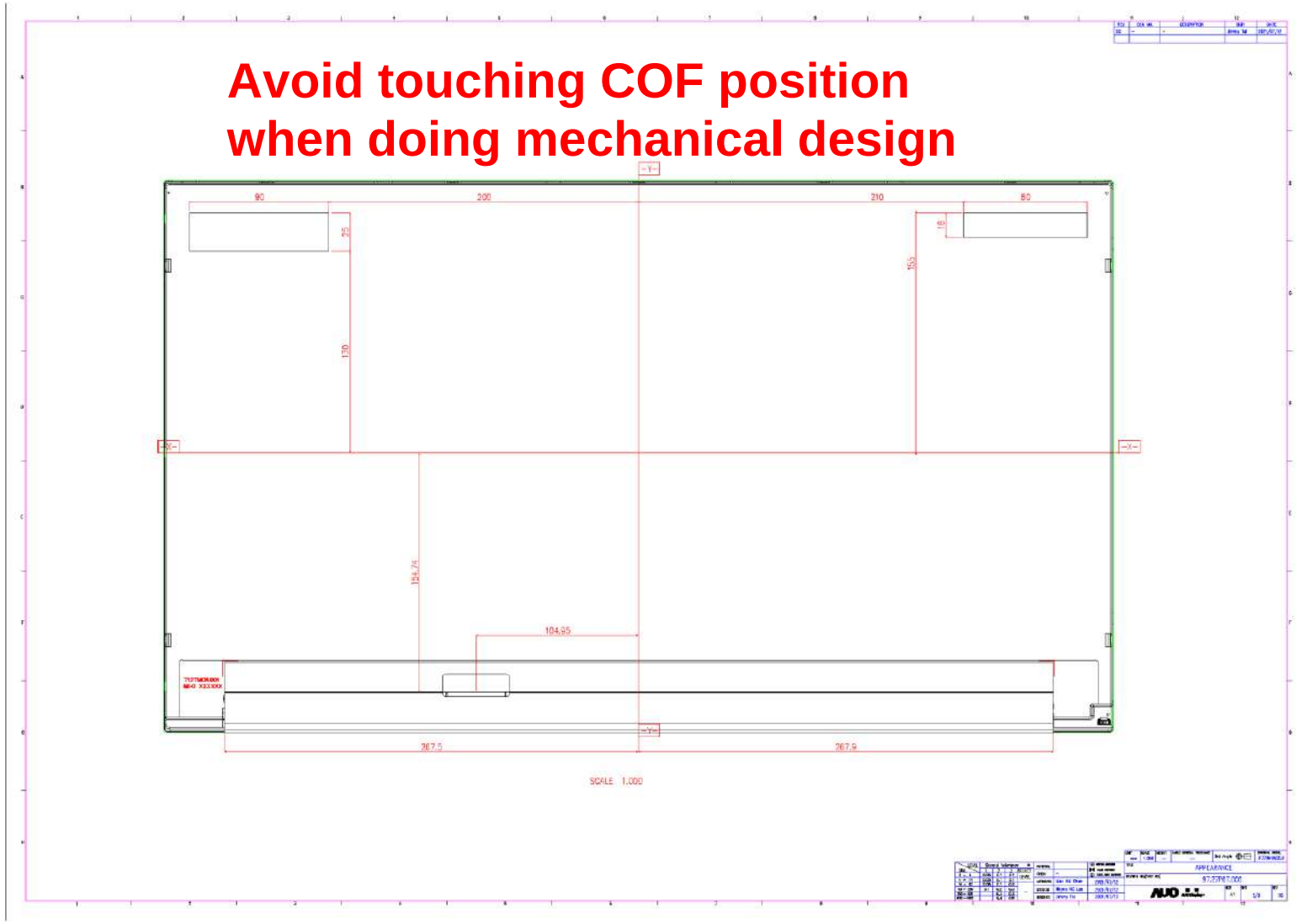

COF Position

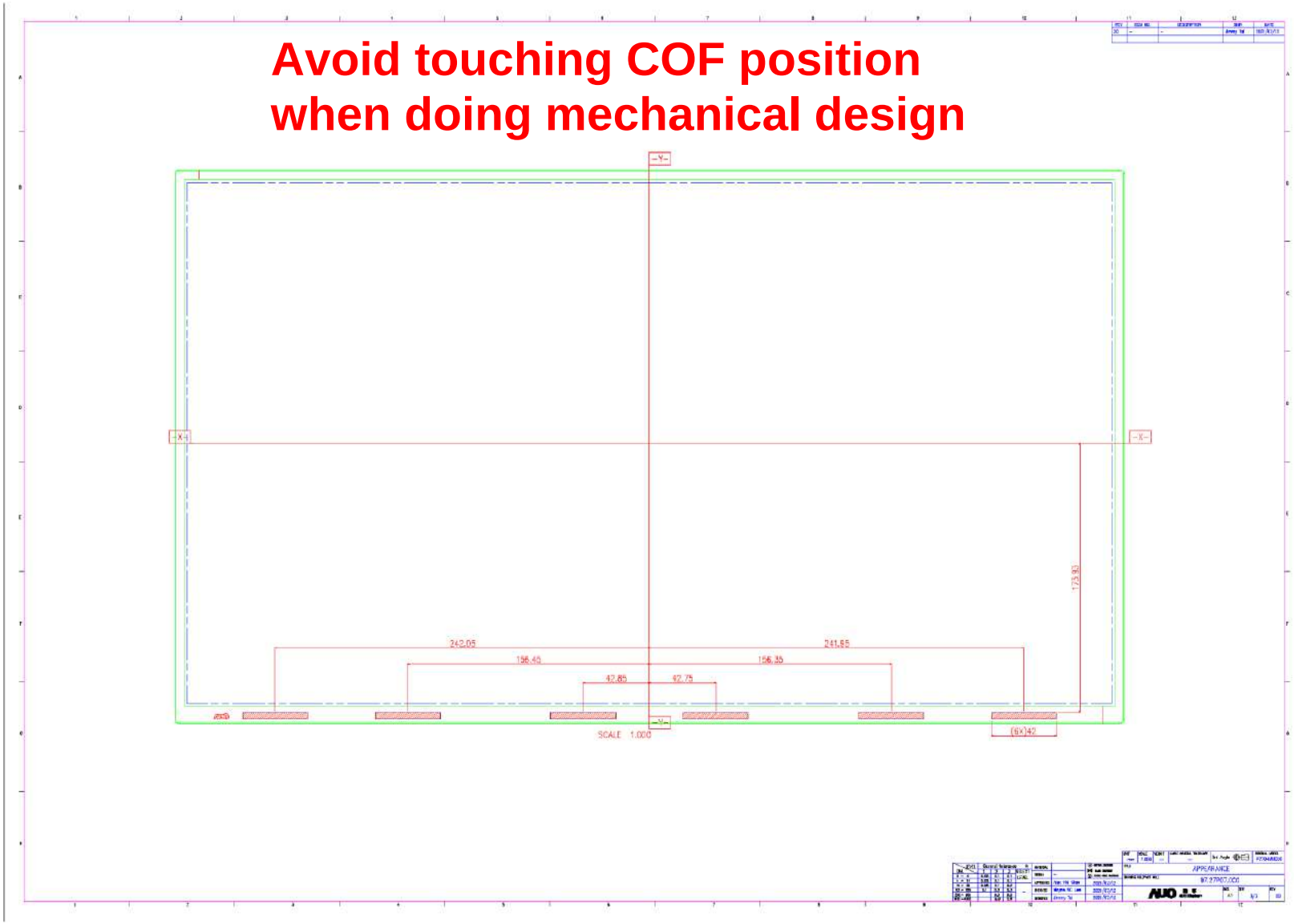

8 Packing Specification

8.1 Packing Flow

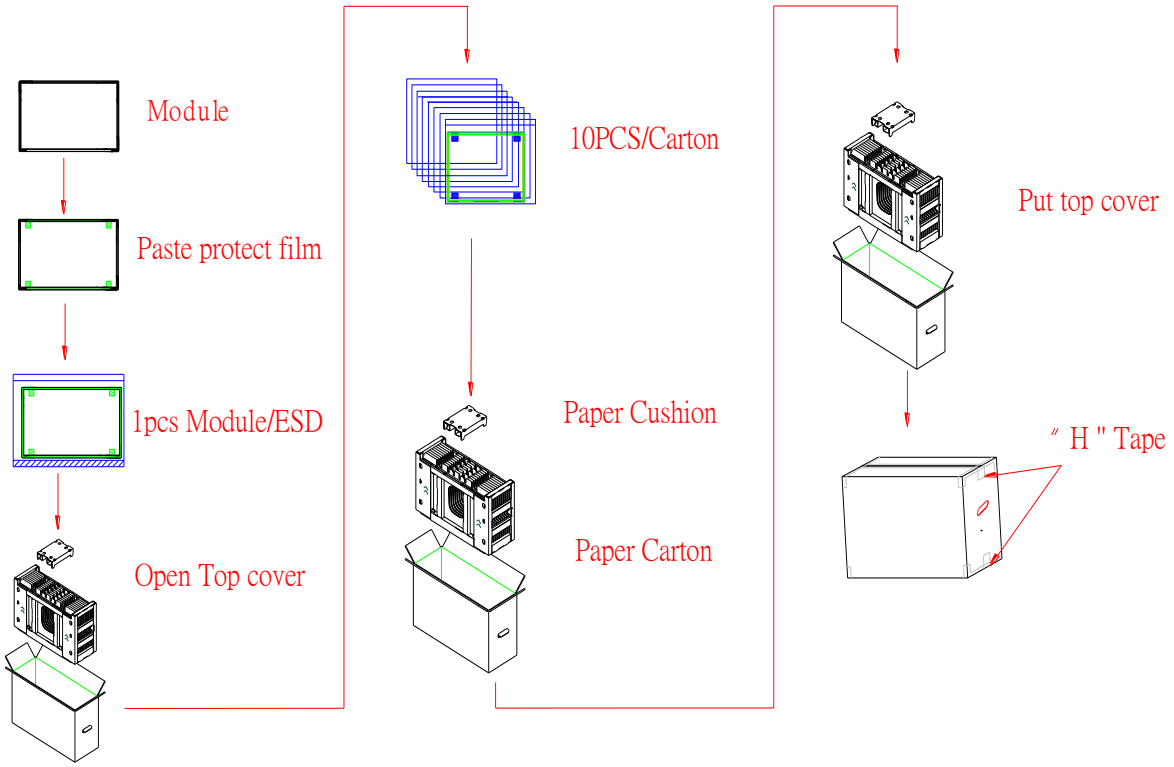

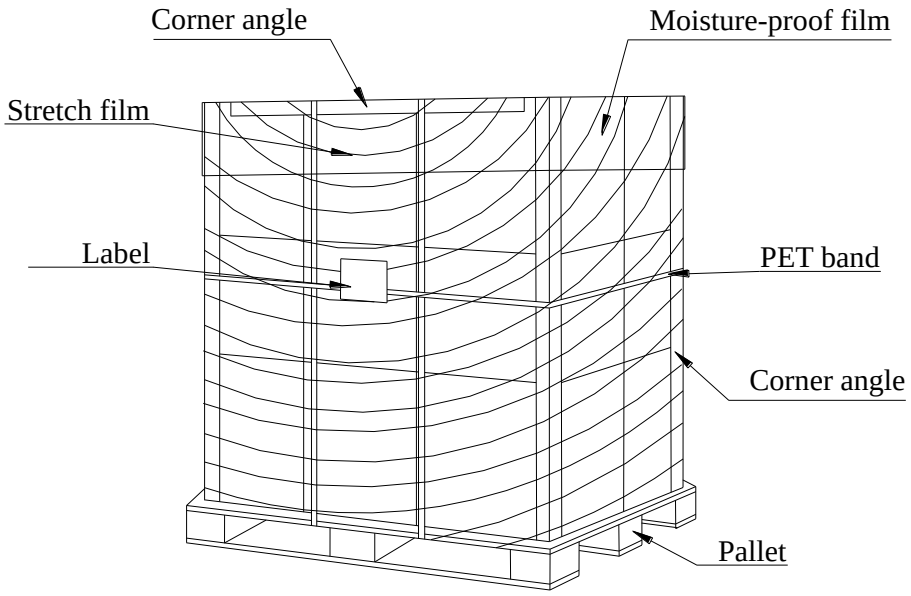

8.2 Pallet and shipment information

	Item	Specification			Remark
		Q'ty	Dimension	Weight(kg)	
1	Panel	1	613.6(H)mm x 356.85(V)mm x 10(D)mm	2.180	
2	Cushion	1	-	4.41	
3	Box	1	708(L)mm x 261(W)mm x 473(H)mm	1.38	without Panel & cushion
4	Packing Box	10 pcs/Box	708(L)mm x 261(W)mm x 473(H)mm	27.13	with panel & cushion
5	Pallet	1	1070(L)mm x 740(W)mm x 138(H)mm	12.9	
6	Pallet after Packing	8 boxes/pallet	1070(L)mm x 740(W)mm x 138(H)mm	229.94	